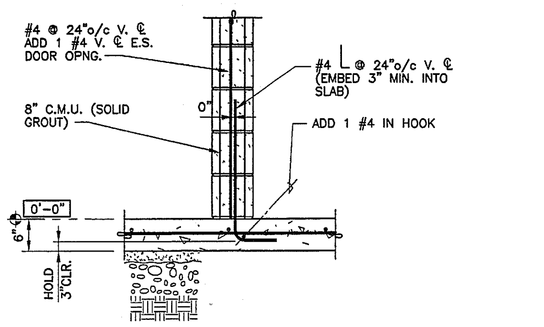

SECTION A-0.2

$\frac{3}{4}$" = 1'-0"

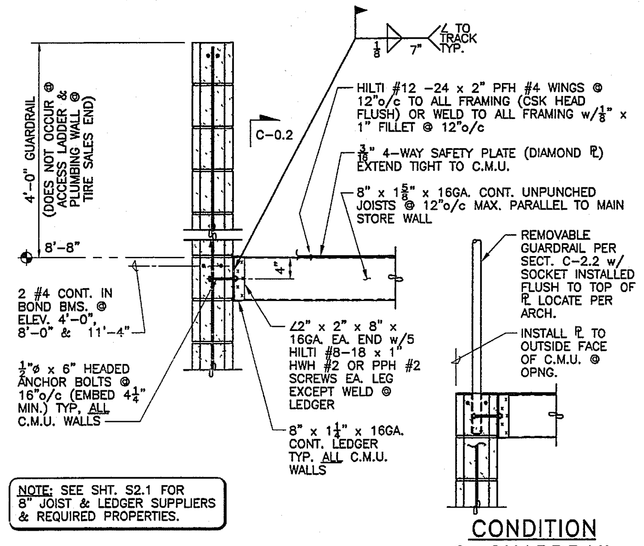

CONDITION @ GUARDRAIL

SECTION B-0.2

$\frac{3}{4}$" = 1'-0"

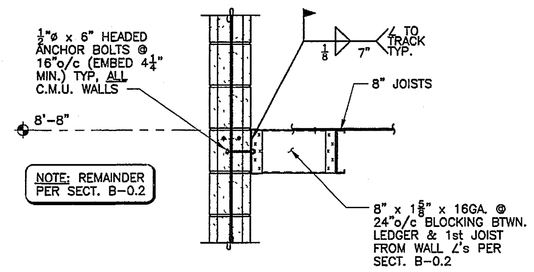

SECTION C-0.2

$\frac{3}{4}$" = 1'-0"

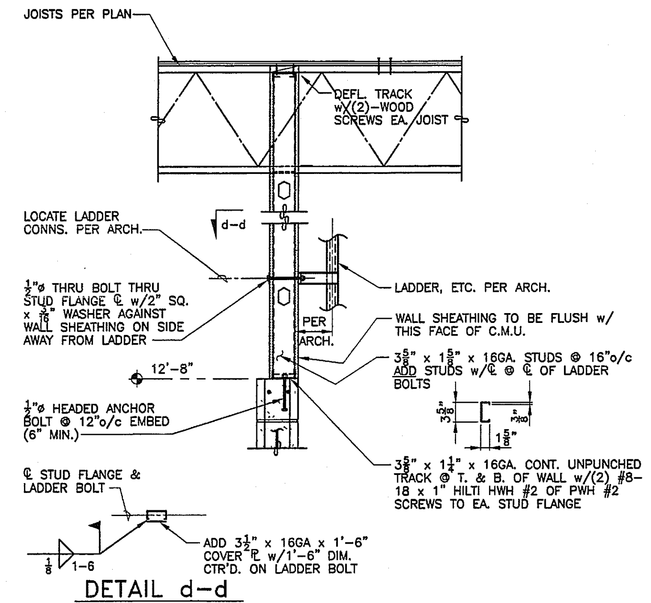

DETAIL d-d

SECTION D-0.2

$\frac{3}{4}$" = 1'-0"

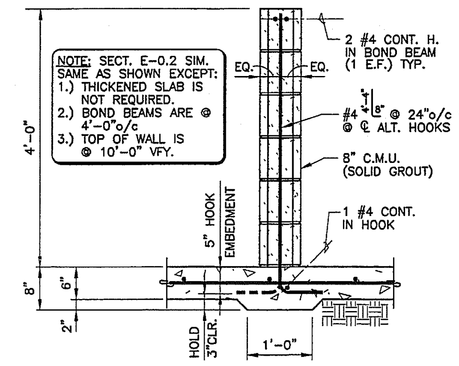

(TIRE INSTALL WALL)

SECTION E-0.2

$\frac{3}{4}$" = 1'-0"

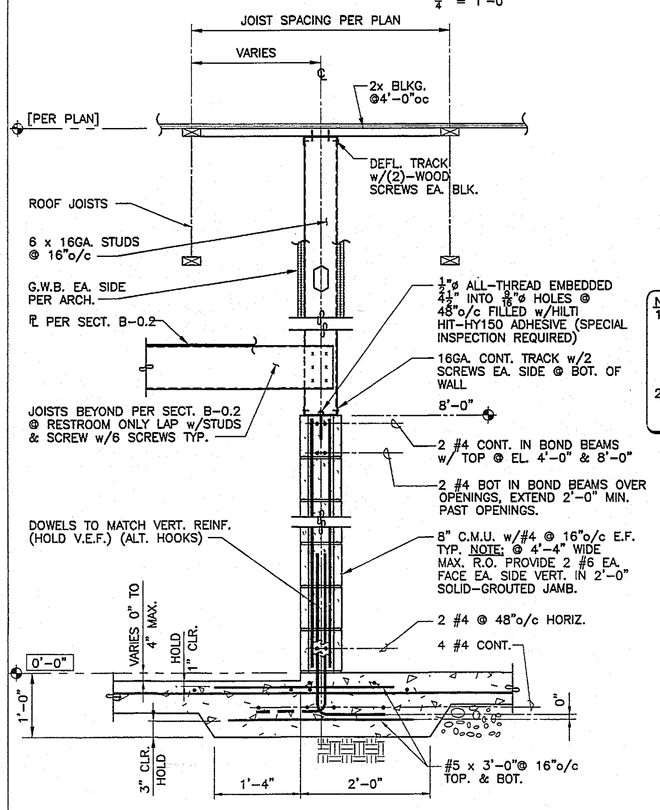

SECTION F-0.2

$\frac{3}{4}$" = 1'-0"

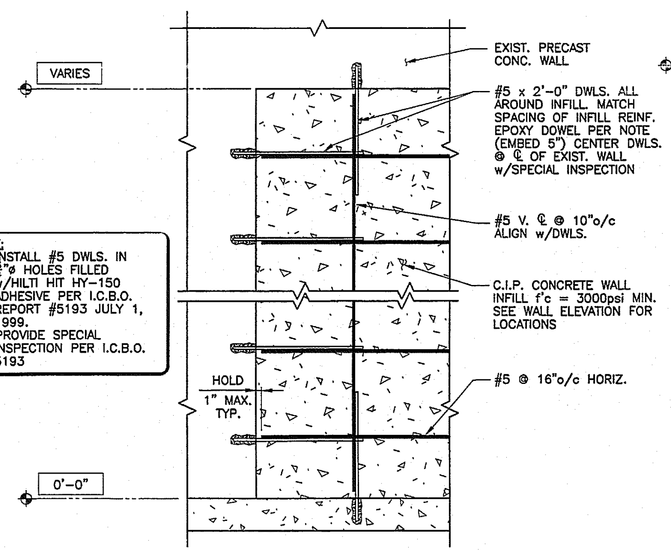

TYPICAL INFILL DETAIL

SECTION G-0.2

(LOCATE OPNG. PER ARCH.) $\frac{3}{4}$" = 1'-0"

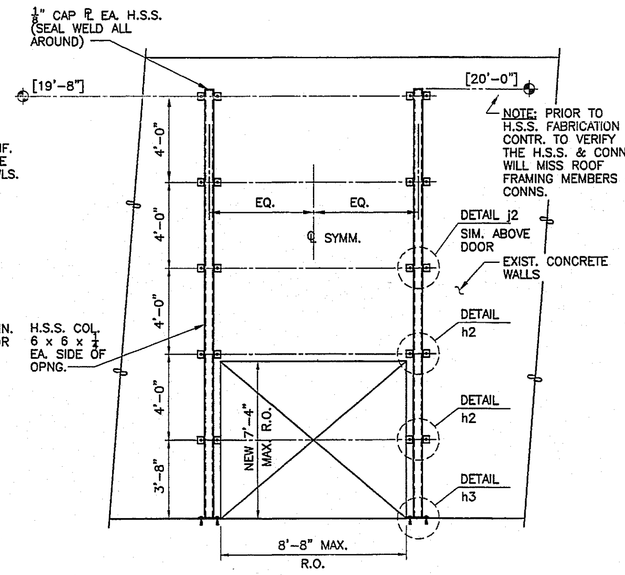

SECTION H-0.2

$\frac{1}{4}$" = 1'-0"

NOTES:
1.) USE $\frac{5}{8}$"ø ALL-THREAD EMBEDDED 4$\frac{1}{2}$" MIN. INTO $\frac{11}{16}$"ø HOLES FILLED w/HILTI HIT HY-150 ADHESIVE.
2.) DO NOT SUBSTITUTE OTHER ADHESIVES FOR THE HILTI HIT HY-150 WITHOUT PRIOR WRITTEN AUTHORIZATION FROM E.N.W.
3.) HOLD T.S. $\frac{3}{8}$" MAX. FROM WALL.
4. ANCHOR HOLE THRU ANGLE TO BE $\frac{13}{16}$" x 1$\frac{13}{16}$" HORIZ. SLOT CTR'D ON THE 4" DIM.
5.) ANCHORS TO BE PLACED @ 90° TO WALL.
6.) PROVIDE SPECIAL INSPECTION FOR ADHESIVE ANCHORS PER I.C.B.O. REPORT ER5193.
7.) OPENING SHOWN MUST BE LOCATED AT LEAST 4'-0" FROM EXISTING WALL EXPANSION JOINTS.

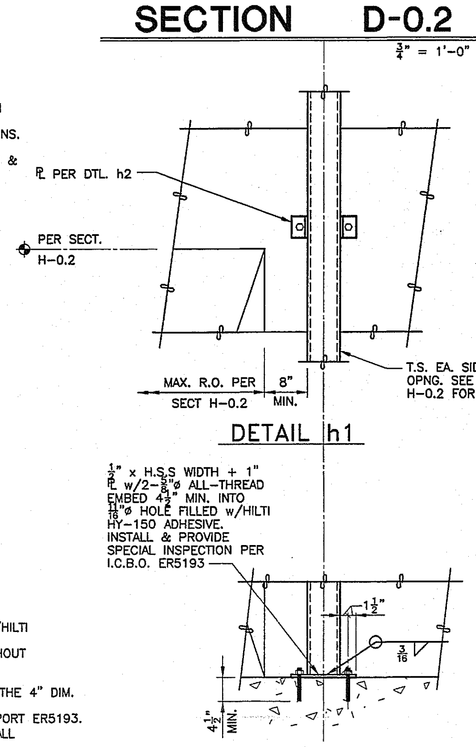

DETAIL h1

DETAIL h3

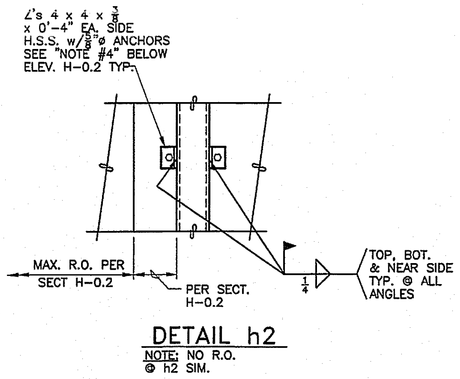

DETAIL h2

NOTE: NO R.O. @ h2 SIM.

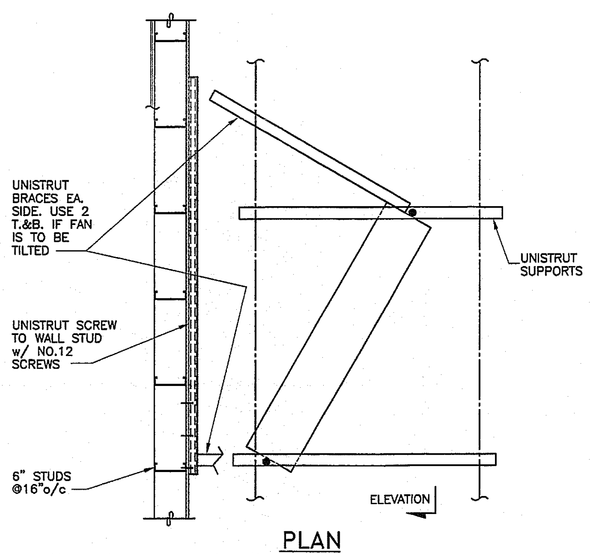

PLAN

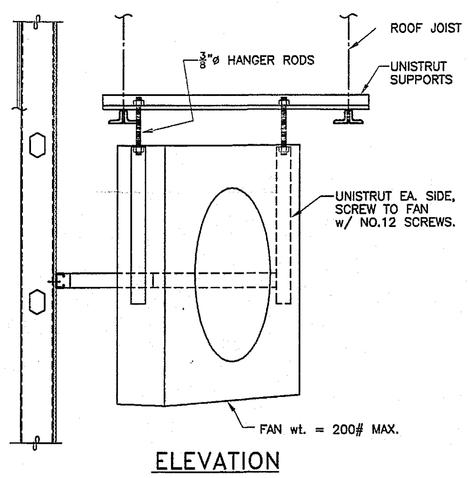

ELEVATION

TIRE CENTER FAN DETAIL

$\frac{3}{4}$" = 1'-0"

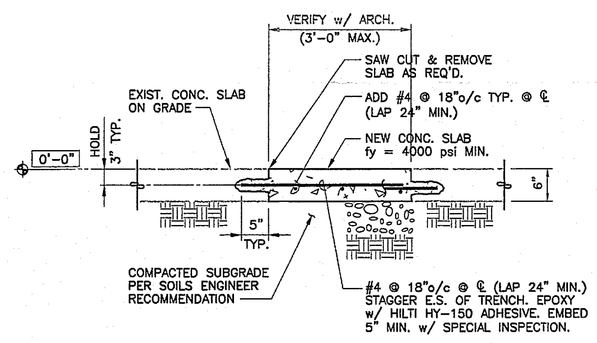

NON-STRUCTURAL SLAB REPLACEMENT FOR PLUMBING INSTALLATION

$\frac{3}{4}$" = 1'-0"

WEISER IRON
APR 03 2007
RECEIVED

NO.	DRAWING REVISIONS	DATE
2	BLDG. DEPT. COMMENTS	2-16-07
1	BLDG. DEPT. COMMENTS	1-16-07

DRAWING SUBMITTALS	
SUBMIT FOR PERMIT	11-21-06
SUBMIT FOR BID	
SUBMIT FOR CONSTRUCTION	3-19-07

NO.	DRAWING REVISIONS	DATE

REGISTERED PROFESSIONAL ENGINEER — WILLIAM ALAN HEYNINGEN — 24498 — STATE OF WASHINGTON

DATE SIGNED 3-19-07

ENW ENGINEERS NORTHWEST, INC., P.S.
STRUCTURAL ENGINEERS
6969 WOODLAWN AVE. N.E. SEATTLE, WASHINGTON 98115
(206) 525-7650, FAX (206) 522-6098
WWW.ENWSEATTLE.COM

SHEET CONTENTS: TIRE CENTER RESTROOM & MISC. SECTIONS

COSTCO WHOLESALE

WAREHOUSE #455
12700 DAY STREET
MORENO VALLEY, CA 92533

JOB NO:	94100009
ENGINEER:	P. VAN HEYNINGEN
DRAWN:	BDS
DATE:	10-30-2006
SHEET NO:	S0.2

OF 11

L:\94Files\94100\94100009\cos-Moreno Valley-s02-misc. sects-16-94100009.dwg, 03-08-07, 11:18am, brentg, 16