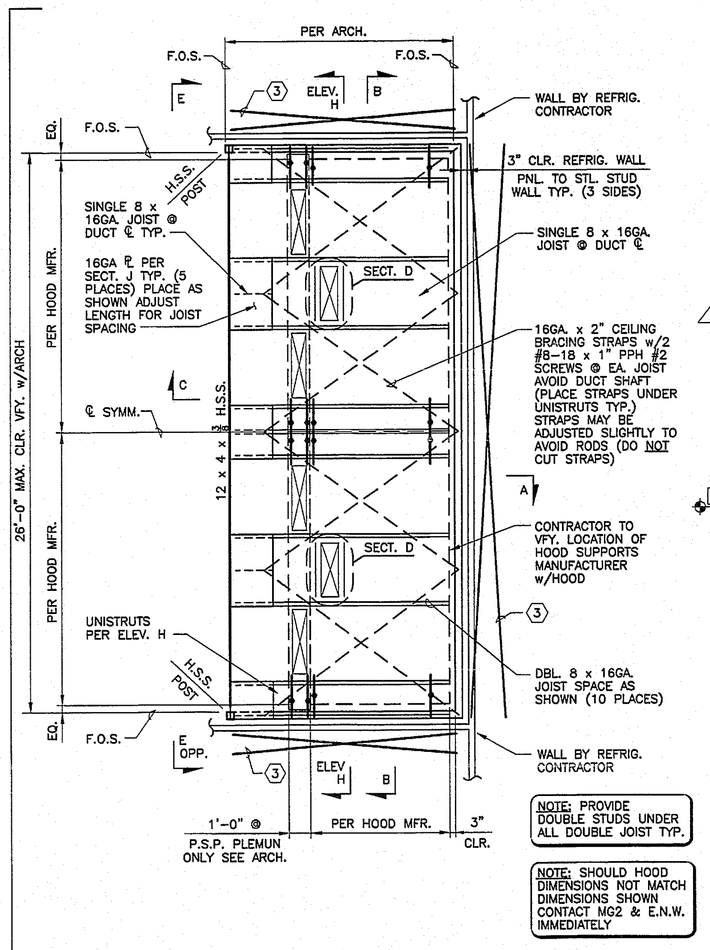

NOTE: PROVIDE DOUBLE STUDS UNDER ALL DOUBLE JOIST TYP.

NOTE: SHOULD HOOD DIMENSIONS NOT MATCH DIMENSIONS SHOWN CONTACT MG2 & E.N.W. IMMEDIATELY

FRAMING PLAN

1/4" = 1'-0"

NOTES:
1.) VERIFY LOCATION AND ALL DIMENSIONS w/ARCHITECT.
2.) SCREWS ARE NOT TO BE SUBSTITUTED FOR THE WELDS SHOWN.
3.) DETAILS F AND G APPLY ONLY TO U.B.C. SEISMIC ZONES 3 & 4.
4.) NO DOORS OR OPNGS. ARE TO OCCUR IN THE 3 ROTISSERIE WALLS.
5.) X-BRACES SHOWN THUS: >< & NOTED AS ◯ ARE PER ELEVATION G & WALL BRACING SCHEDULE.
6.) F.O.S. = FACE OF STUD.

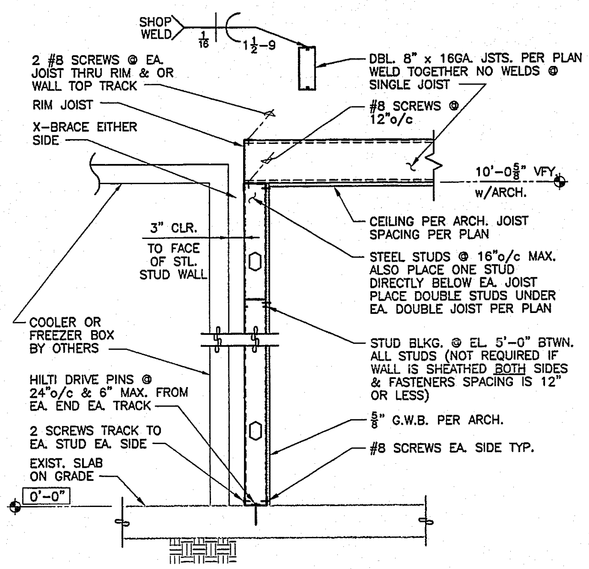

SECTION A

3/4" = 1'-0"

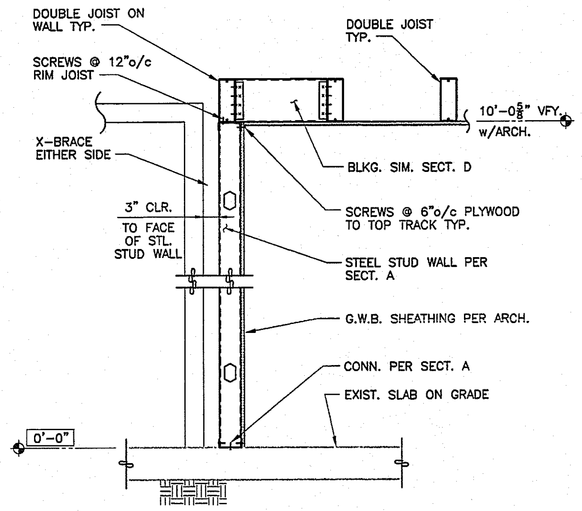

SECTION B

3/4" = 1'-0"

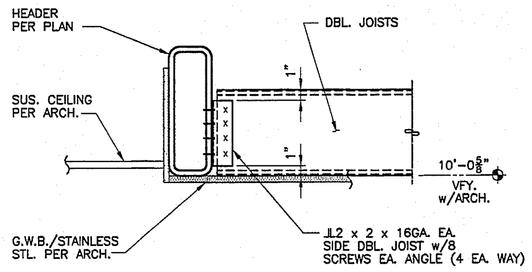

SECTION C

1 1/2" = 1'-0"

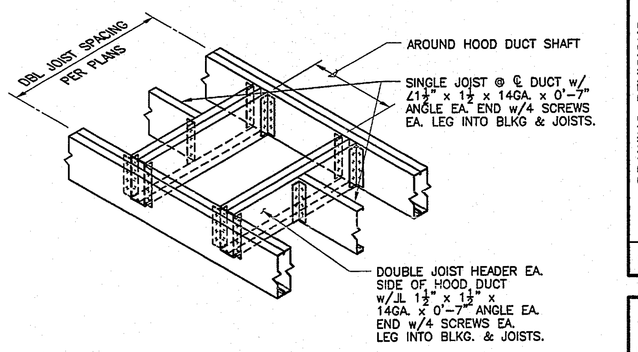

SECTION D

1 1/2" = 1'-0"

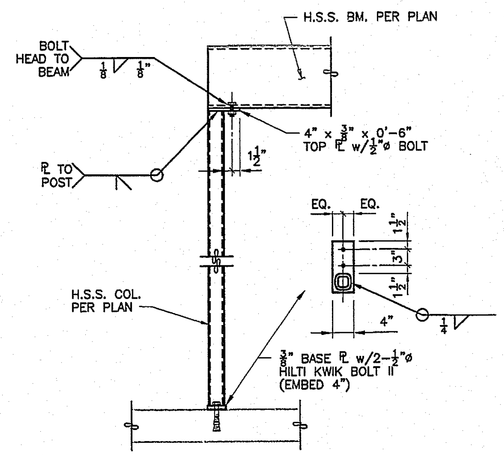

SECTION E

3/4" = 1'-0"

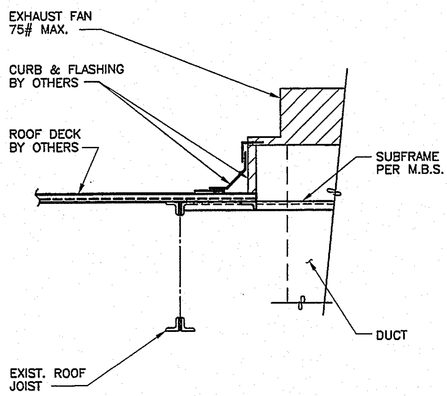

SECTION F

3/4" = 1'-0"

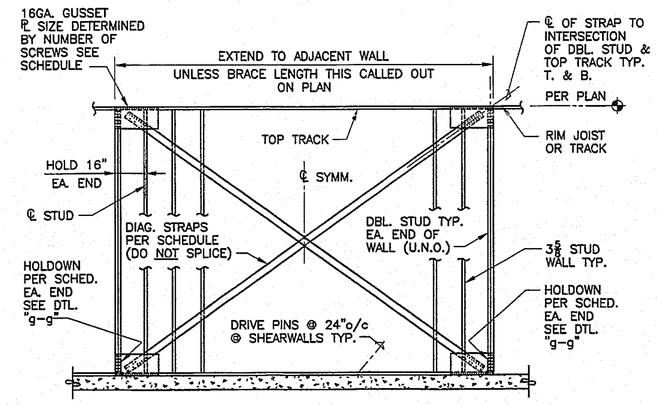

TYP. "X" BRACED SHEAR WALL ELEV.

NOTES:
1.) BRACES MUST BE TIGHT & STRAIGHT. NO SLACK ALLOWED BTWN. STUDS.

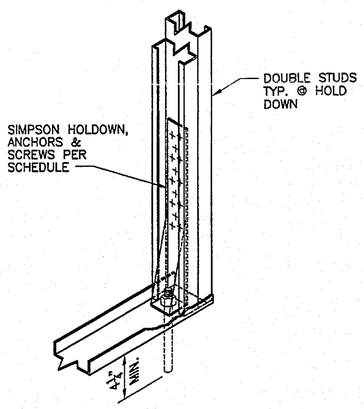

DETAIL "g-g"

1 1/2" = 1'-0"

NOTE: SEE DETAIL ELEV. "G" FOR DIAGONAL WALL STRAPS.

WEISER IRON
APR 03 2007
RECEIVED

ELEVATION G

N.T.S.

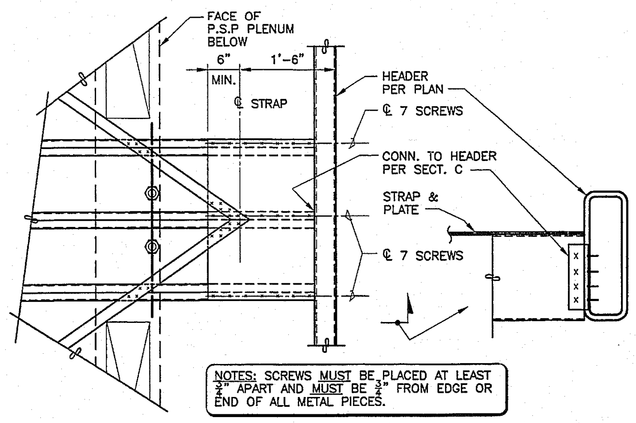

NOTES: SCREWS MUST BE PLACED AT LEAST 3/4" APART AND MUST BE 3/4" FROM EDGE OR END OF ALL METAL PIECES.

SECTION J

3/4" = 1'-0"

WALL BRACING SCHEDULE

MARK	STRAP (50 k.s.i.)	HOLDOWN	NUMBER OF SCREWS		
			GUSSET TO T. & B. TRACK	GUSSET TO DBL. STUDS	GUSSET TO STRAP
3	3" x 16GA.	S/LTT20	12	25	15

NOTES:
1.) SCREWS MUST BE PLACED AT LEAST 3/4" APART AND MUST BE 3/4" FROM EDGE OR END OF ALL METAL PIECES.

HOLDOWN SCHEDULE

HOLDOWN	ANCHORS	SCREWS
SIMPSON S/LTT20	1/2"ø ALL-THREADED EMBEDDED INTO HILTI HIT HY-150 ADHESIVE	8 #10

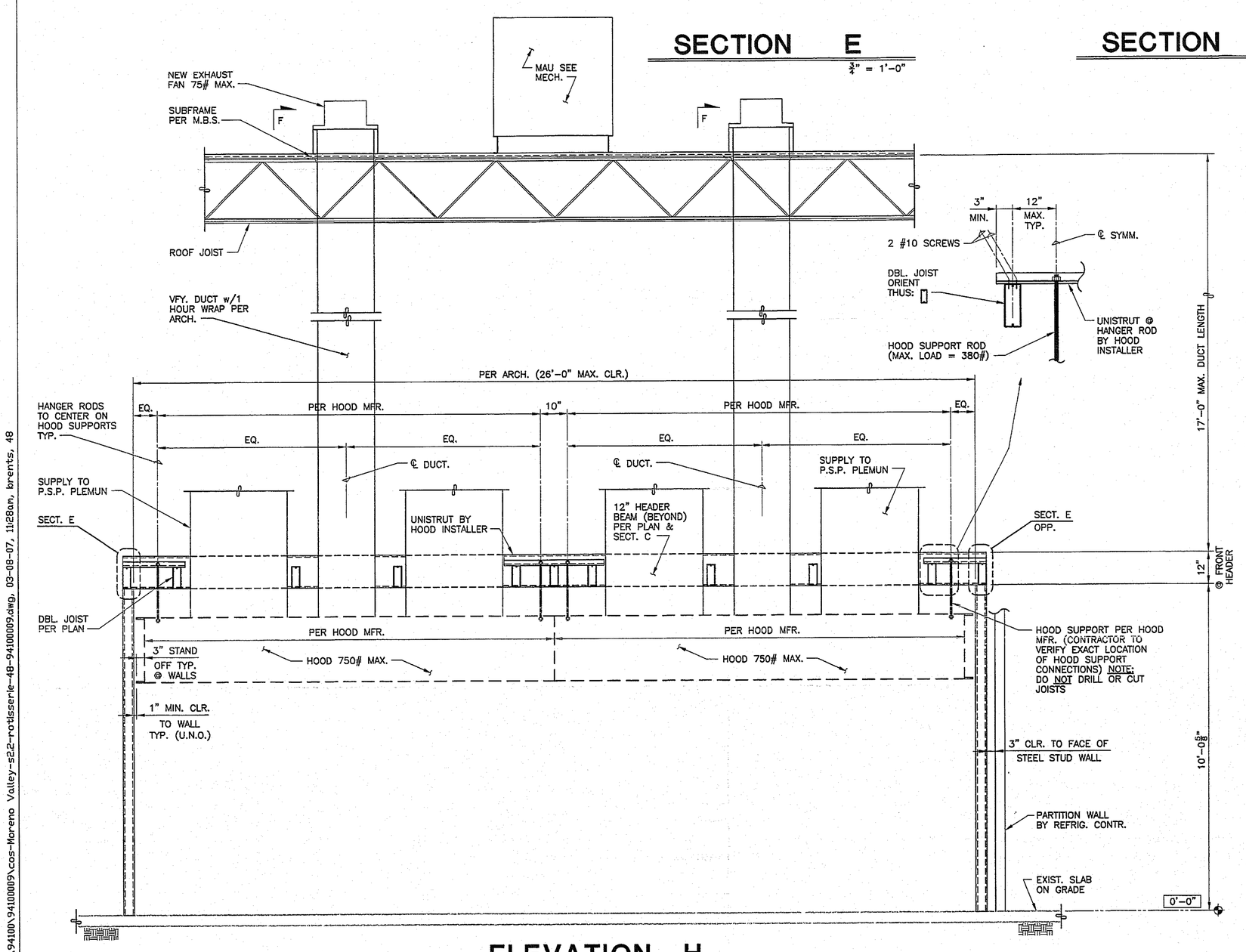

ELEVATION H

1/4" = 1'-0"

NOTES:
1.) CONTRACTOR TO VERIFY THAT LOCATION OF DUCT CAN PENETRATE ROOF WITHOUT INTERFERENCE FROM ROOF FRAMING.
2.) CONTRACTOR TO VERIFY ALL HOOD & HOOD SUPPORT DIMENSIONS.

CHICKEN ROTISSERIE PARTS SCHEDULE

ITEM	CALLOUT	MINIMUM PROPERTIES					* APPROVED SUPPLIERS & THEIR CALLOUT FOR THESE ITEMS	
		Fy(k.s.i.)	I(in.4)	S(in.3)	A(in.2)	ry	SSMA ICBO4943	
CEILING SUPPORT JOISTS ** (10'-0" MAX. SPAN)	8" x 1 5/8" x 16GA. [1 5/8" MIN.	50	5.54	1.30	0.65	.51	800S162 - 54 (50ksi)	
HEADER (29'-5" MAX. SPAN)	12 x 4 x 3/8" H.S.S.	46	215	35.8	11.8	4.28	---	
RIM JOISTS, ETC. **	8" x 1 1/4" x 16GA. [NOM.	50	4.44	0.96	0.56	.30	800T125 - 54 (50ksi)	
WALL TOP TRACK **	3 5/8" x 1 1/2" x 16GA. [	50	0.65	0.31	0.32	0.37	363T125 - 54 (50ksi)	
WALL BOT. TRACK **	3 5/8" x 1 1/4" x 16GA. [	50	0.65	0.31	0.32	0.37	363T125 - 54 (50ksi)	
WALL STUDS	3 5/8" x 1 5/8" x 20GA. [1/2"MIN.	33	0.49	0.26	0.25	0.59	362S162 - 33	
16GA. x 2" BRACING STRAPS (IN CEILING)	2" WIDE x 16GA. FLAT STRAP	50	---	---	---	---	---	
2" x 2" x 16GA. ANGLE	2 x 2 x 16GA.	50	---	---	---	---	---	
16GA. CORNER PLATE	16GA. x 12" X 12"	50	---	---	---	---	---	
16GA. x 3 1/2" STRAP	16GA. x 3 1/2" STRAP	50	---	---	---	---	---	
SCREWS (LT. GA. TO H.S.S.)	#12-14 x 1" HWH #3						HILTI	SECT. C
SCREWS (MTL. TO MTL.)	#8-18 x 1" HWH #2 OR PPH #2						HILTI	
SCREWS (PLYWOOD TO MTL.)	#8-18 x 1 1/2" HWH #2						HILTI	
WALL & BOTTOM TRACK ANCHORS	#DS37P10 (0.177"ø X 1 1/2" LOW VELOCITY DRIVE PINS						HILTI	I.C.B.O. 2388
P1000	UNISTRUT	33	0.185	0.202	0.566	---	UNISTRUT CORP.	
HEADER POST	3 1/2 x 3 1/2 x 1/8 H.S.S.	46	2.46	1.64	1.89	1.14		

NOTES:
* SUBSTITUTION OF OTHER SUPPLIERS FOR THESE ITEMS IS NOT ALLOWED.
** THESE JOIST & TRACK MEMBERS TO BE UNPUNCHED.

NO.	DRAWING REVISIONS	DATE
2	BLDG. DEPT. COMMENTS	2-16-07
1	BLDG. DEPT. COMMENTS	1-16-07
	DRAWING SUBMITTALS	
	SUBMIT FOR PERMIT	11-21-06
	SUBMIT FOR BID	
	SUBMIT FOR CONSTRUCTION	3-8-07

NO.	DRAWING REVISIONS	DATE

REGISTERED PROFESSIONAL ENGINEER PETER ALAN VAN HEYNINGEN 24900 STATE OF CALIFORNIA

DATE SIGNED: 3-8-07

ENW ENGINEERS NORTHWEST, INC., P.S.
STRUCTURAL ENGINEERS
6969 WOODLAWN AVE. N.E. SEATTLE, WASHINGTON 98115
(206) 525-7508 FAX (206) 526-6868
WWW.ENWSEATTLE.COM

SHEET CONTENTS: ROTISSERIE FRAMING PLAN, ELEVATION & SECTIONS

COSTCO WHOLESALE

WAREHOUSE #455
12700 DAY STREET
MORENO VALLEY, CA 92533

JOB NO:	94100009
ENGINEER:	P. VAN HEYNINGEN
DRAWN:	M.G.L.
DATE:	10-30-2006
SHEET NO:	S2.2

OF 11

L:\94files\94100\94100009\cos-Moreno Valley-s22-rotisserie-48-94100009.dwg, 03-08-07, 1128am, brents, 48