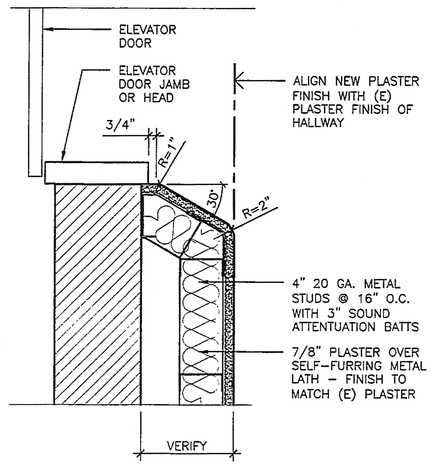

NOT USED	-	-	ELEVATOR JAMB DETAIL	1 1/2"=1'-0"	8

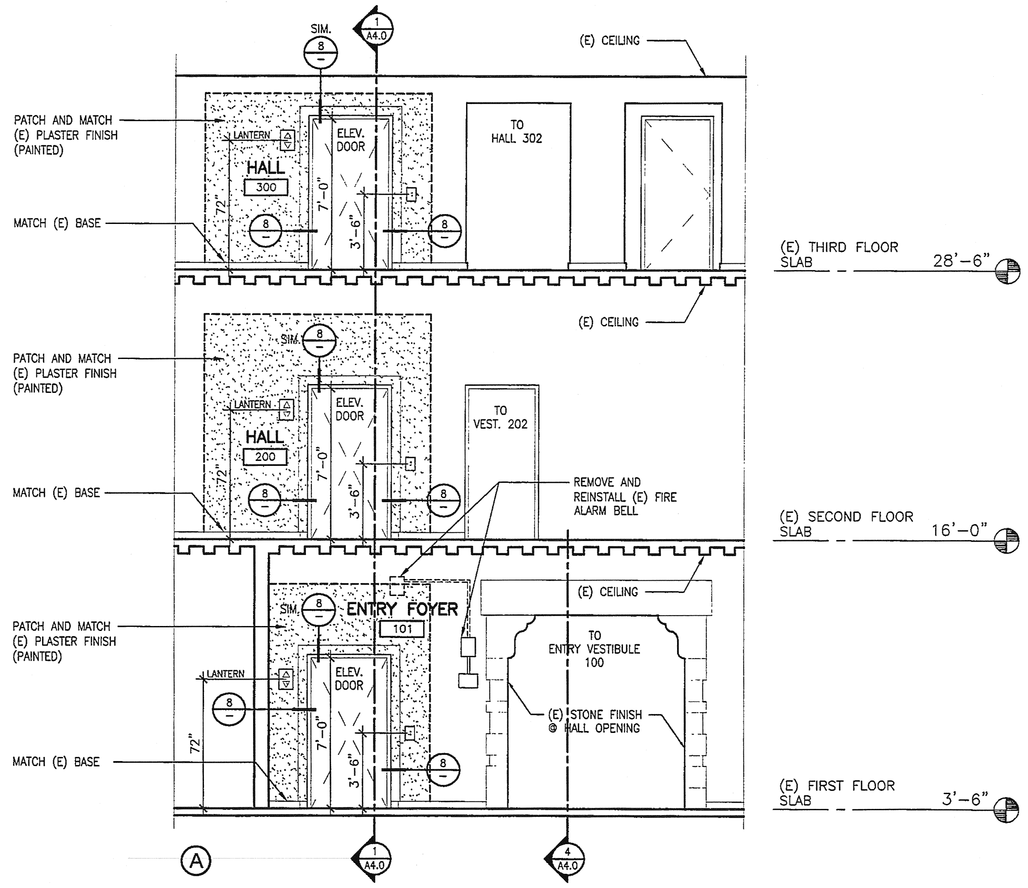

NOTE:
ALL ELEVATOR COMPONENTS SUCH AS CALL BUTTONS AND LANTERN PLATES SHALL BE BRONZE FINISH

NOT USED	-	-	NOT USED	-	-	INTERIOR ELEVATIONS @ (E) HALLS 101, 200, 300	1/4"=1'-0"	5

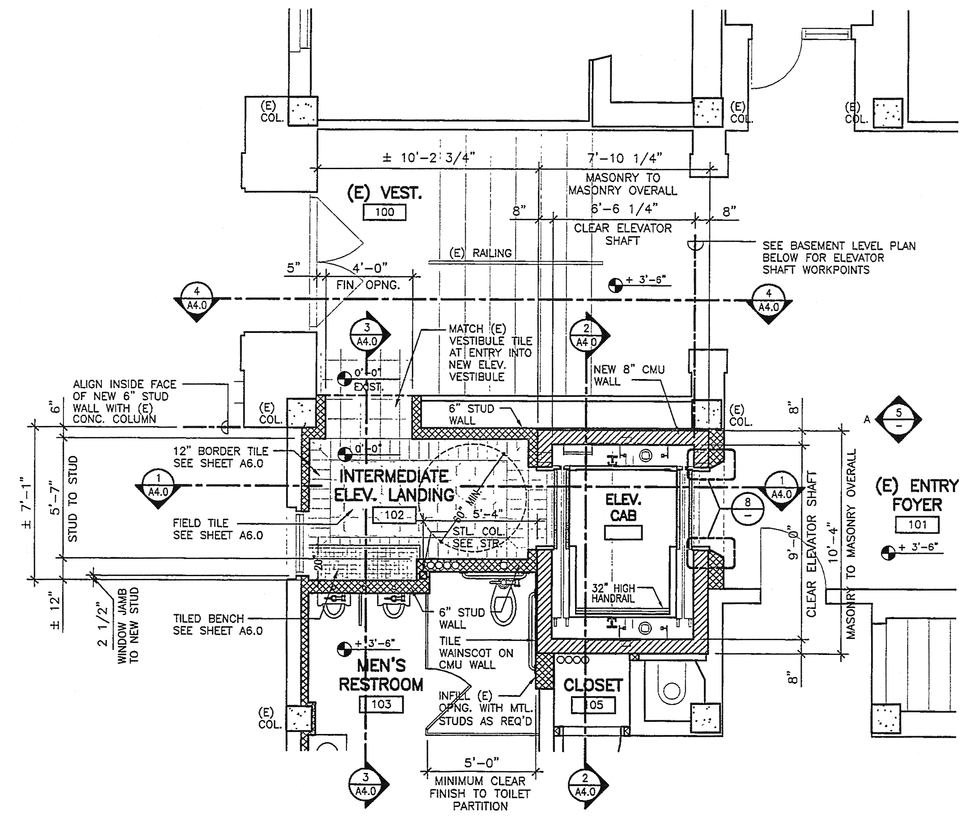

NOTE:
REFER TO ELEVATOR SHOP DRAWINGS FOR ALL DIMENSIONS AND SPECIFICATIONS OF ELEVATOR SHAFT AND CAB. CONTACT ARCHITECT IF DISCREPANCIES EXIST BETWEEN THESE DRAWINGS AND ELEVATOR SHOP DRAWINGS.

NOT USED	-	-	NOT USED	-	-	ELEVATOR INTERMEDIATE AND FIRST FLOOR PLAN	1/4"=1'-0"	2

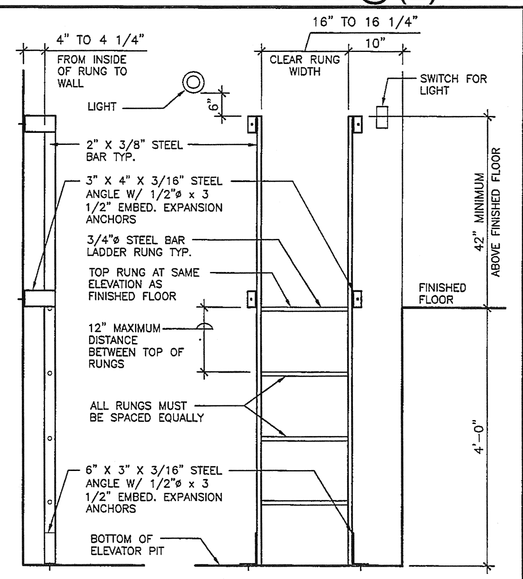

NOT USED	-	-	NOT USED	-	-	PIT LADDER DETAIL	3/4"=1'-0"	7

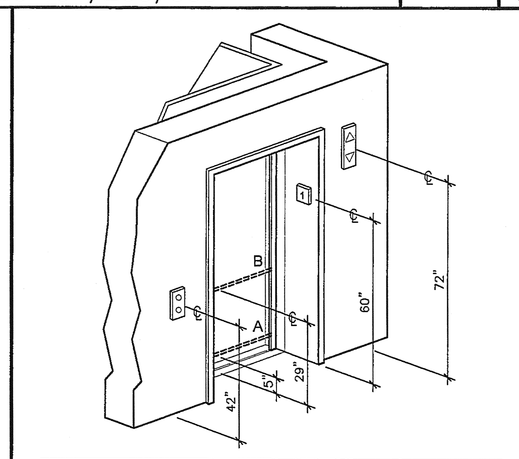

NOTE:
THE AUTOMATIC DOOR REOPENING DEVICE IS ACTIVATED IF AN OBJECT PASSES THROUGH EITHER LINE A OR LINE B. LINE A AND LINE B REPRESENT THE VERTICAL LOCATION OF THE DOOR REOPENING DEVICE NOT REQUIRING CONTACT.

NOT USED	-	-	NOT USED	-	-	ELEVATOR ENTRANCE	NONE	4

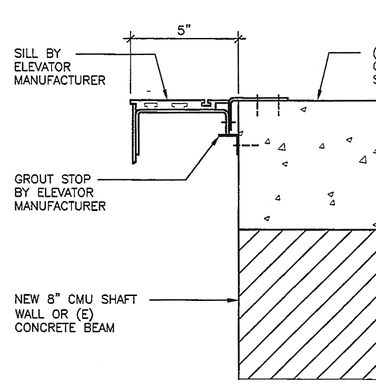

NOT USED	-	-	NOT USED	-	-	SILL DETAIL	3"=1'-0"	6

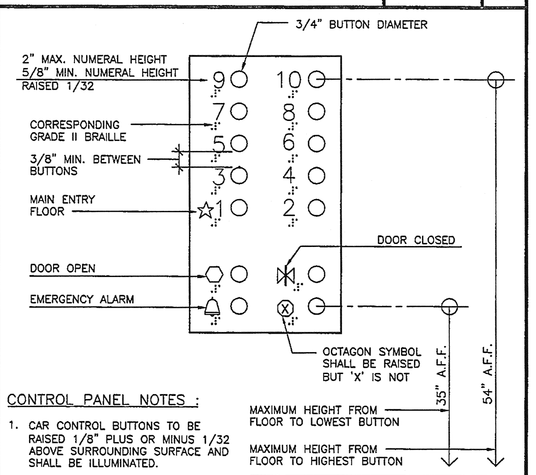

CONTROL PANEL NOTES :

1. CAR CONTROL BUTTONS TO BE RAISED 1/8" PLUS OR MINUS 1/32 ABOVE SURROUNDING SURFACE AND SHALL BE ILLUMINATED.
2. LETTERS AND NUMERALS SHALL BE RAISED 1/32 UPPERCASE SANS SERIF OR SIMPLE SERIF TYPE AND SHALL BE ACCOMP- ANIED WITH GRADE II BRAILLE. RAISED CHARACTERS SHALL BE 9/8 MIN. HIGH BUT NO HIGHER THAN 2" MAX.

NOTE:
ALL ELEVATOR COMPONENTS SUCH AS CALL BUTTONS, CONTROL PANEL, AND LANTERN PLATES SHALL BE BRONZE FINISH

NOT USED	-	-	NOT USED	-	-	ELEV. CONTROL PANEL	N.T.S.	3

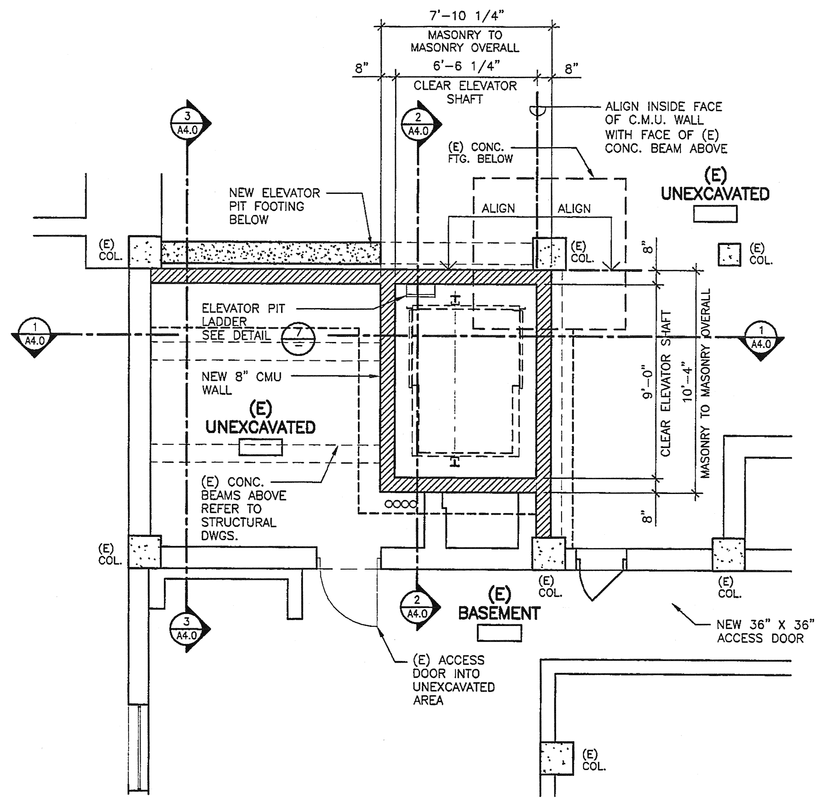

NOTE:
REFER TO ELEVATOR SHOP DRAWINGS FOR ALL DIMENSIONS AND SPECIFICATIONS OF ELEVATOR SHAFT AND CAB. CONTACT ARCHITECT IF DISCREPANCIES EXIST BETWEEN THESE DRAWINGS AND ELEVATOR SHOP DRAWINGS.

NOT USED	-	-	NOT USED	-	-	ELEVATOR PIT / BASEMENT LEVEL PLAN	1/4"=1'-0"	1

Brian R. Bloom
Architect
350 S. Milliken Ave., Ste. G, Ontario, CA 91761-7850
(909) 390-7209 FAX: (909) 390-7509
ARCHITECTURE AND PLANNING

LICENSED ARCHITECT BRIAN R. BLOOM NO. C15844 5/31/07 STATE OF CALIFORNIA

CONSULTANT

SCRIPPS
THE WOMEN'S COLLEGE
• CLAREMONT •

PROJECT
SCRIPPS COLLEGE
BALCH HALL
ELEVATOR AND
RESTROOMS REMODEL

PROJECT LOCATION
1030 COLUMBIA AVENUE
CLAREMONT, CA 91711

ISSUANCES
02-21-07 PLAN CHECK SUBMITTAL
BID SET

REVISIONS

TITLE
ENLARGED ELEVATOR PLANS AND DETAILS

SIEMBER IRON
MAR 09 2007
RECEIVED

SCALE
AS NOTED
DATE
JANUARY 2006
JOB NO.
240906

A5.1