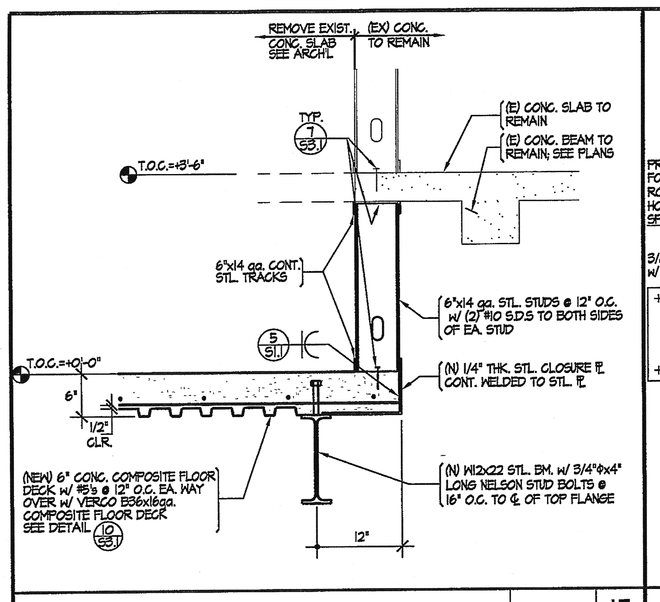

FRAMING DETAIL 1"=1'-0" 15

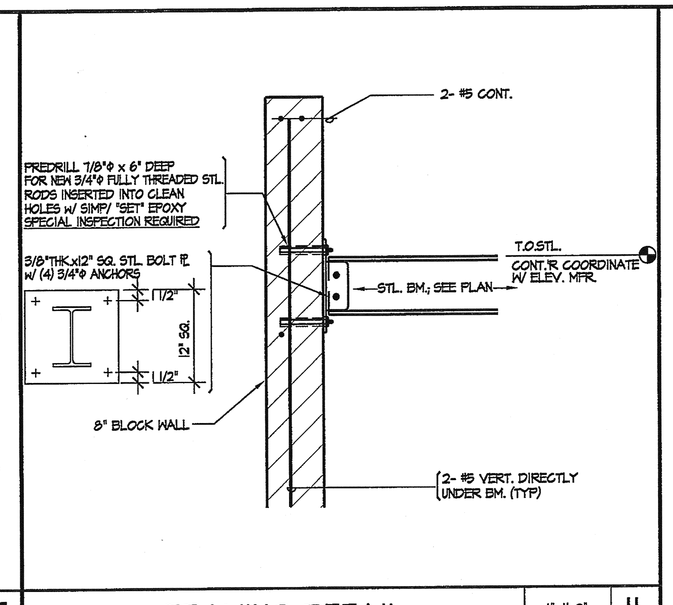

FRAMING DETAIL 1"=1'-0" 11

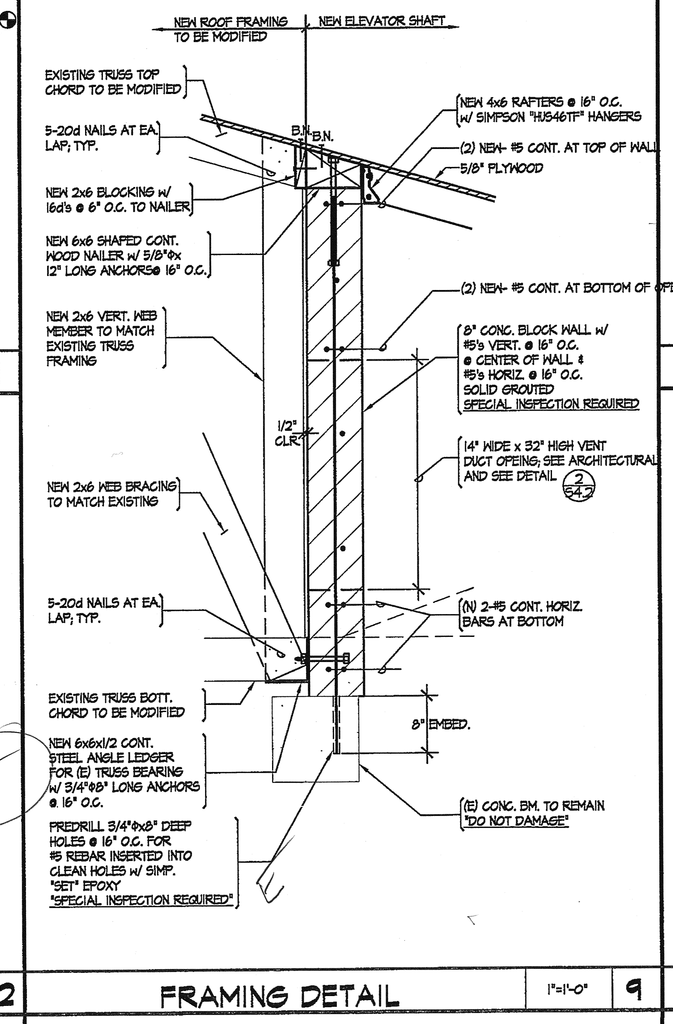

FRAMING DETAIL 1"=1'-0" 9

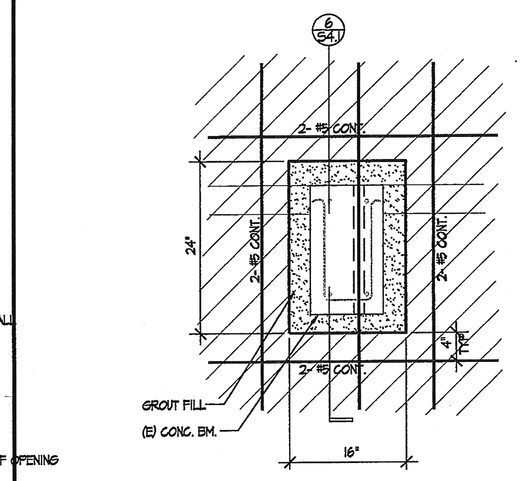

FRAMING DETAIL 1"=1'-0" 5

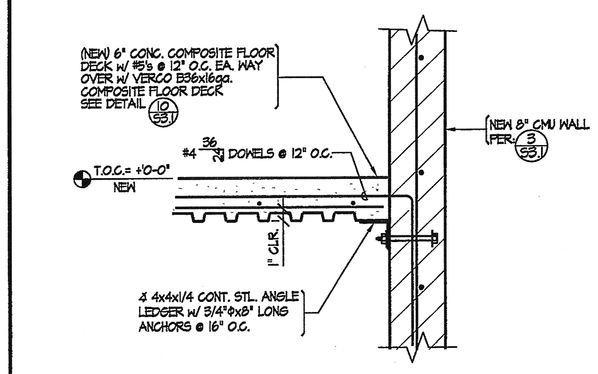

FRAMING DETAIL 1"=1'-0" 1

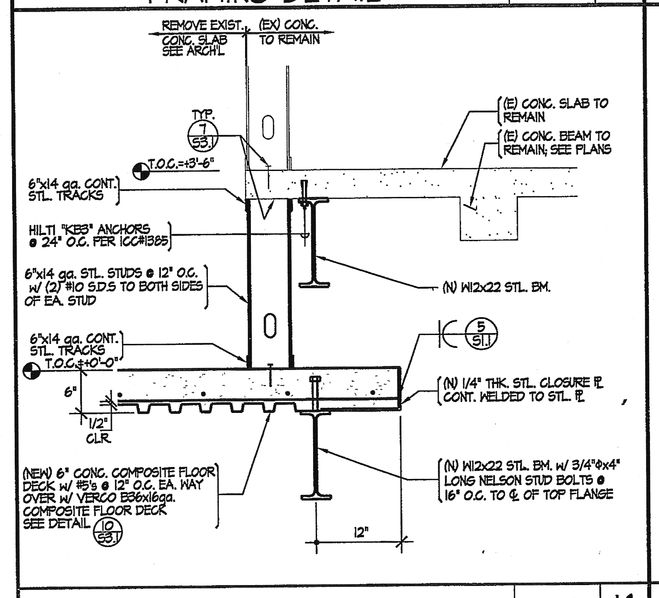

FRAMING DETAIL 1"=1'-0" 16

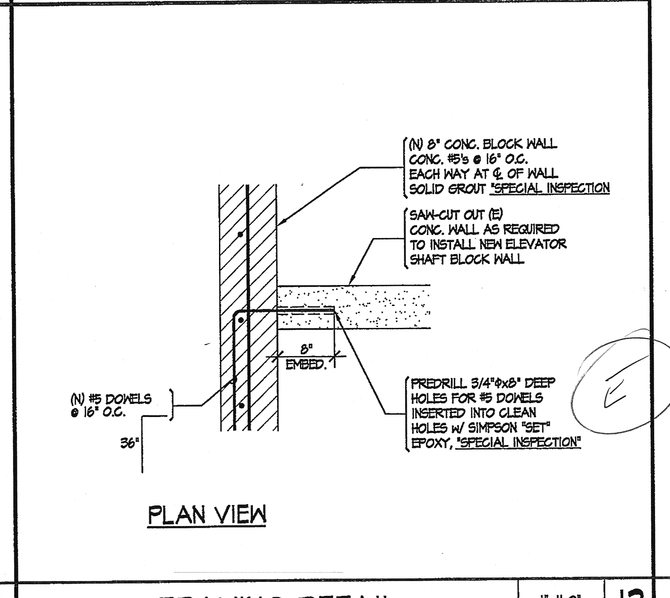

PLAN VIEW

FRAMING DETAIL 1"=1'-0" 12

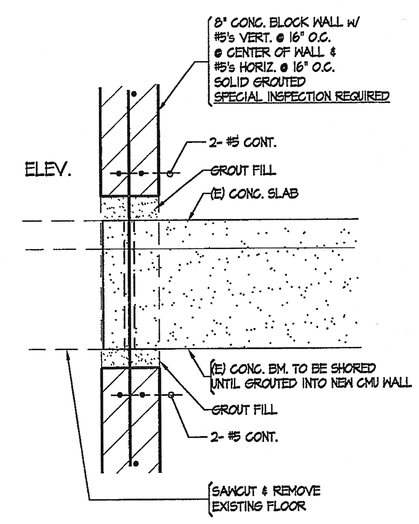

FRAMING DETAIL 1"=1'-0" 6

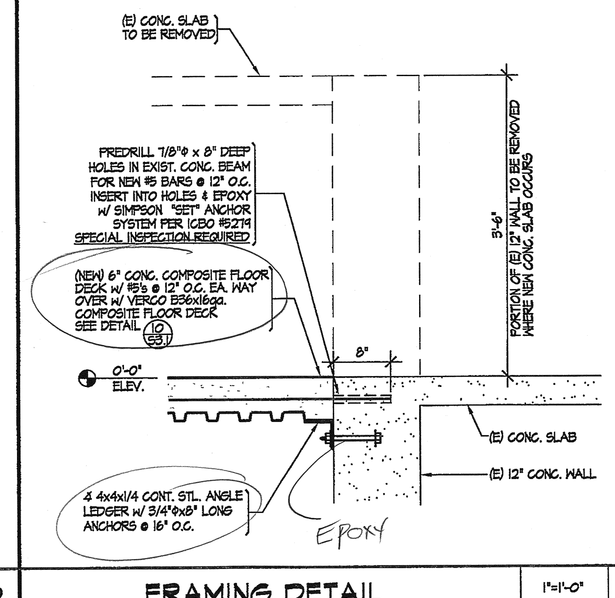

FRAMING DETAIL 1"=1'-0" 2

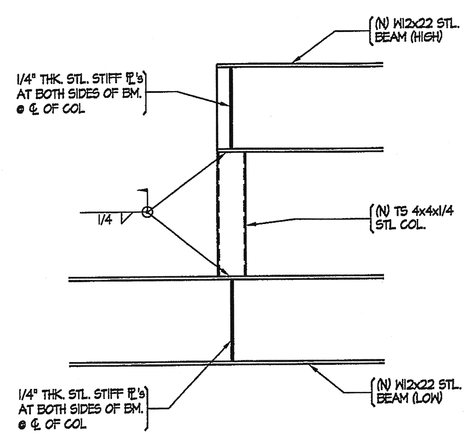

FRAMING DETAIL 1"=1'-0" 17

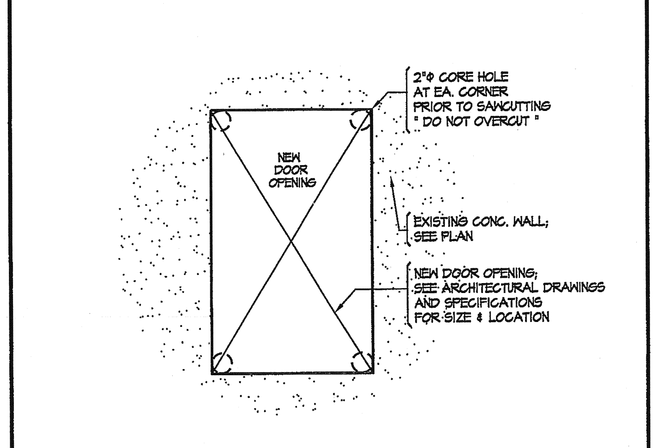

FRAMING DETAIL 1"=1'-0" 13

FRAMING DETAIL 1"=1'-0" 10

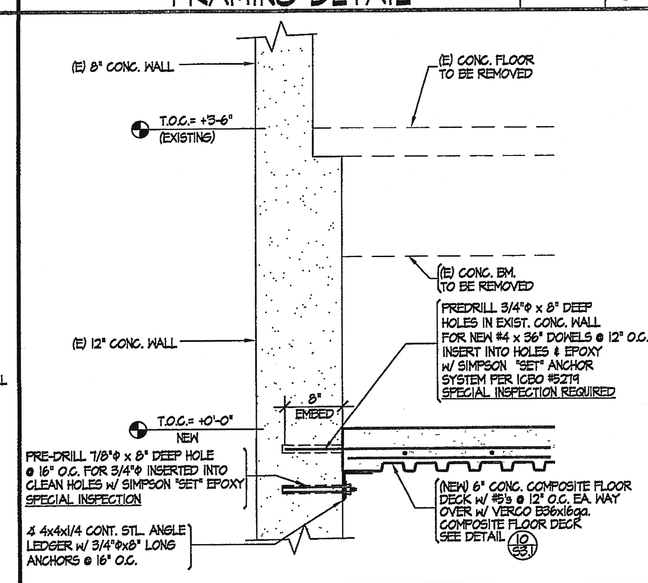

FRAMING DETAIL 1"=1'-0" 7

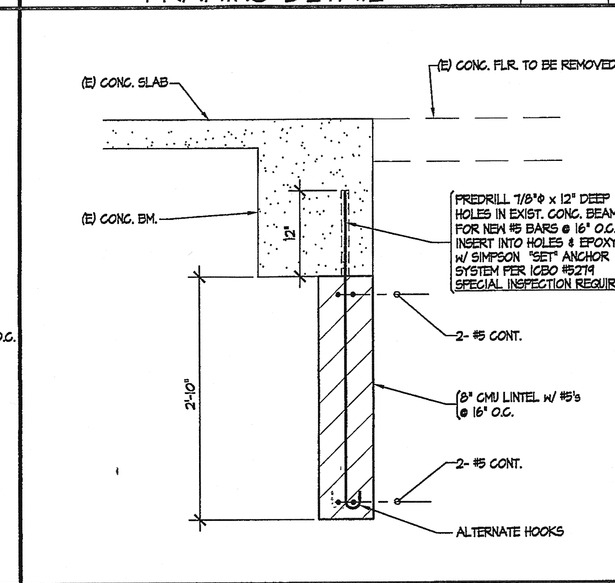

FRAMING DETAIL 1"=1'-0" 3

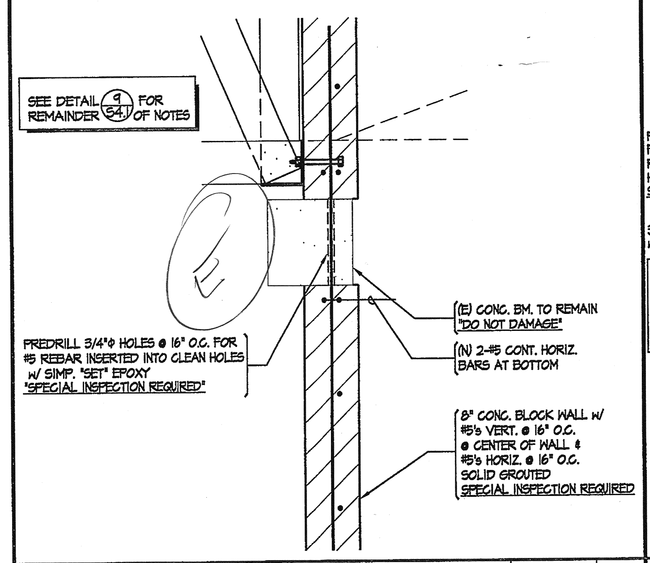

FRAMING DETAIL 1"=1'-0" 18

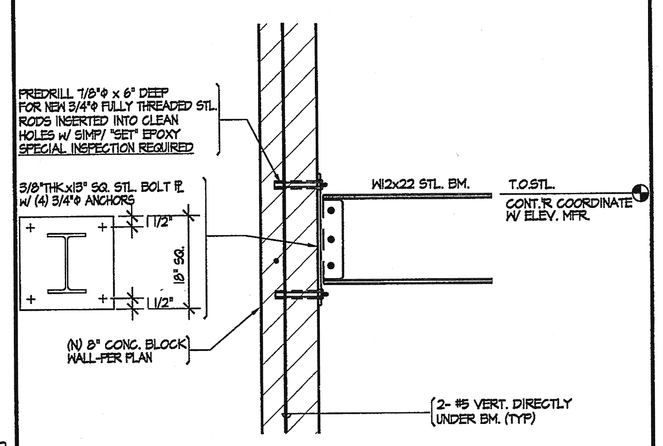

FRAMING DETAIL 1"=1'-0" 14

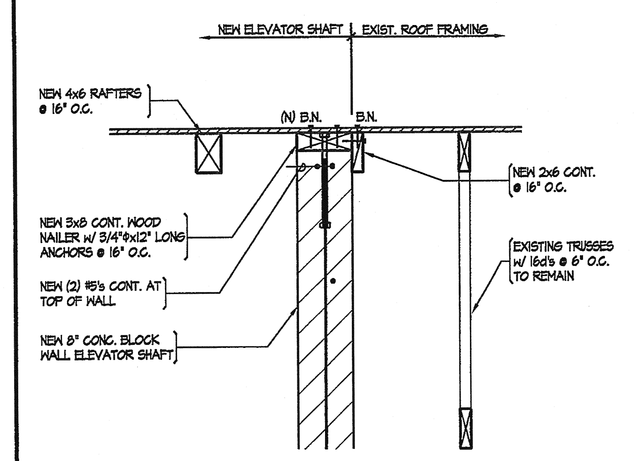

FRAMING DETAIL 1"=1'-0" 8

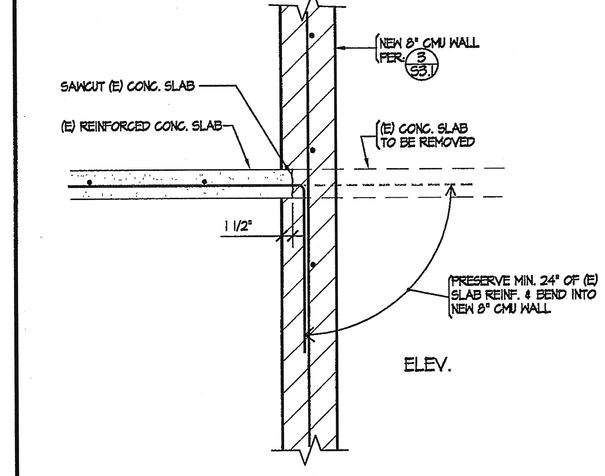

FRAMING DETAIL 1"=1'-0" 4

Brian R. Bloom
Architect
350 S. Milliken Ave., Ste. G, Ontario, CA 91761-7850
(909) 390-7209 FAX: (909) 390-7509
ARCHITECTURE AND PLANNING

CONSULTANT

Knapp & Associates, Inc.
408 South Stoddard Avenue
San Bernardino, CA. 92401
E-Mail 80WARREN@AOL.COM
Tel. (909) 889-0115
Fax. (909) 889-0455

FEB 2 1 2007

SCRIPPS
THE WOMEN'S COLLEGE
• CLAREMONT •

PROJECT

SCRIPPS COLLEGE BALCH HALL ELEVATOR AND RESTROOMS REMODEL

PROJECT LOCATION

1030 COLUMBIA AVENUE
CLAREMONT, CA. 91711

ISSUANCES

2-21-07 PLAN CHECK SUBMITTAL
& BID SET

REVISIONS

TITLE

WEIGER IRON
MAR 19 2007
RECEIVED

SCALE
AS NOTED

DATE
2-21-07

JOB NO.
240903

S4.1