NOT USED

FRAMING DETAIL | 1"=1'-0" | 17

NOT USED

FRAMING DETAIL | 1"=1'-0" | 18

NOT USED

FRAMING DETAIL | 1"=1'-0" | 19

NOT USED

FRAMING DETAIL | 1"=1'-0" | 20

NOT USED

FRAMING DETAIL | 1"=1'-0" | 13

NOT USED

FRAMING DETAIL | 1"=1'-0" | 14

NOT USED

FRAMING DETAIL | 1"=1'-0" | 15

NOT USED

FRAMING DETAIL | 1"=1'-0" | 16

NOT USED

FRAMING DETAIL | 1"=1'-0" | 9

NOT USED

FRAMING DETAIL | 1"=1'-0" | 10

NOT USED

FRAMING DETAIL | 1"=1'-0" | 11

NOT USED

FRAMING DETAIL | 1"=1'-0" | 12

NOT USED

FRAMING DETAIL | 1"=1'-0" | 5

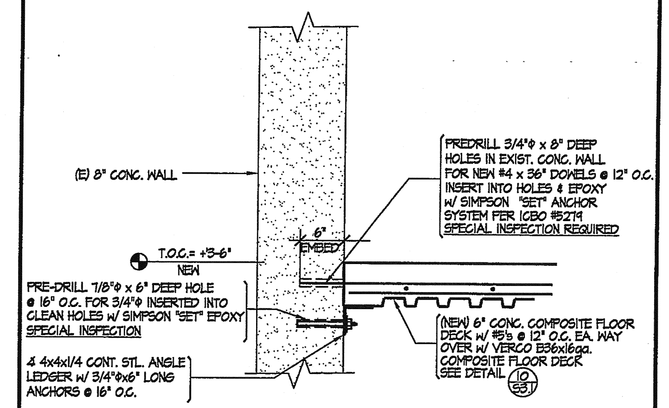

FRAMING DETAIL | 1"=1'-0" | 1

NOT USED

FRAMING DETAIL | 1"=1'-0" | 6

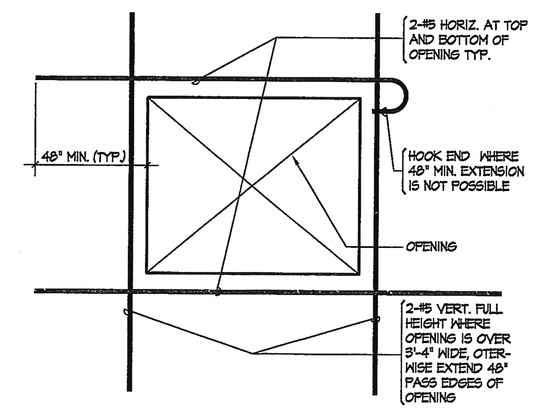

FRAMING DETAIL | 1"=1'-0" | 2

NOT USED

FRAMING DETAIL | 1"=1'-0" | 7

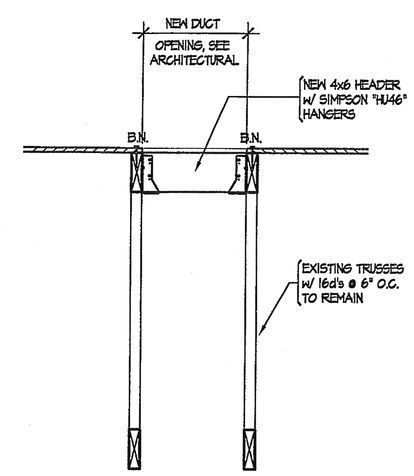

FRAMING DETAIL | 1"=1'-0" | 3

NOT USED

FRAMING DETAIL | 1"=1'-0" | 8

NOT USED

FRAMING DETAIL | 1"=1'-0" | 4

Brian R. Bloom
Architect
350 S. Milliken Ave., Ste. G, Ontario, CA 91761-7850
(909) 390-7209 FAX: (909) 390-7509
ARCHITECTURE AND PLANNING

CONSULTANT

Knapp & Associates, Inc.
408 South Stoddard Avenue
San Bernardino, CA. 92401
E-Mail (KNAPPAE@AOL.COM)
Tel. (909) 889-0115
Fax. (909) 889-0455

FEB 21 2007

SCRIPPS
THE WOMEN'S COLLEGE
• CLAREMONT •

PROJECT

SCRIPPS COLLEGE BALCH HALL ELEVATOR AND RESTROOMS REMODEL

PROJECT LOCATION

1030 COLUMBIA AVENUE
CLAREMONT, CA. 91711

ISSUANCES

2-21-07 PLAN CHECK SUBMITTAL
& BID SET

REVISIONS

TITLE

WEISER IRON
MAR 09 2007
RECEIVED

SCALE
AS NOTED

DATE
2-21-07

JOB NO.
240903

S4.2