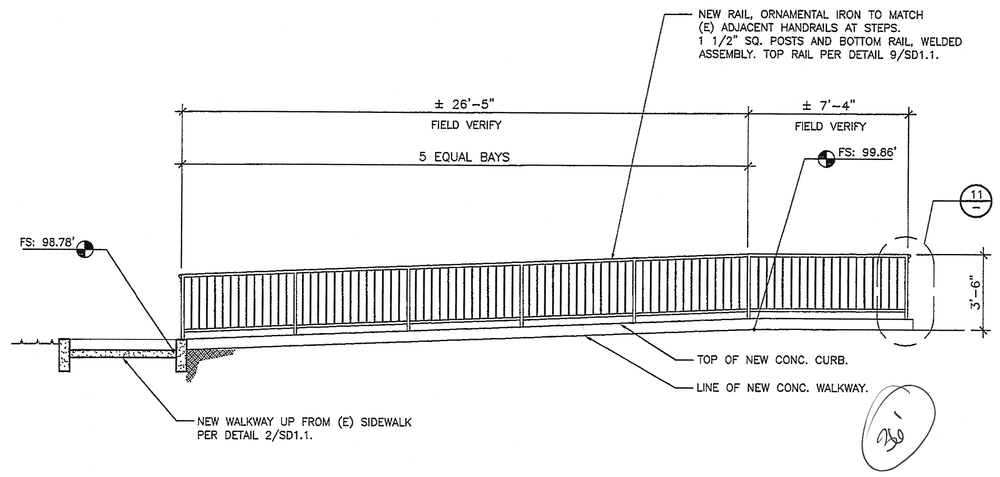


ELEVATION OF ORNAMENTAL IRON RAIL @ WALKWAY | 1/4" = 1'-0" | 8

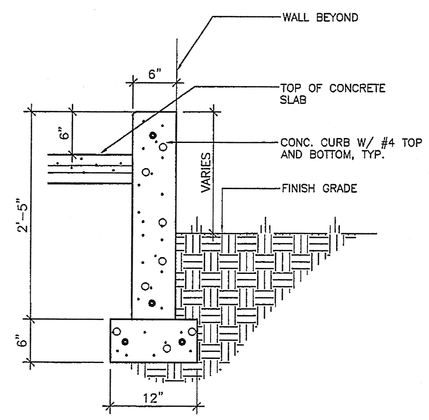


CURB DETAIL | 1"=1'-0" | 4

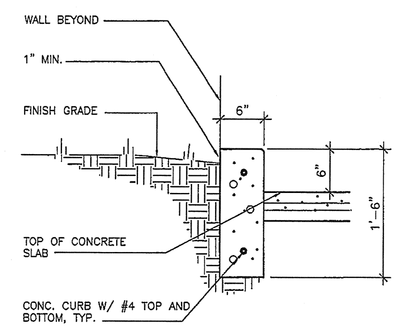


CURB DETAIL | 1"=1'-0" | 3

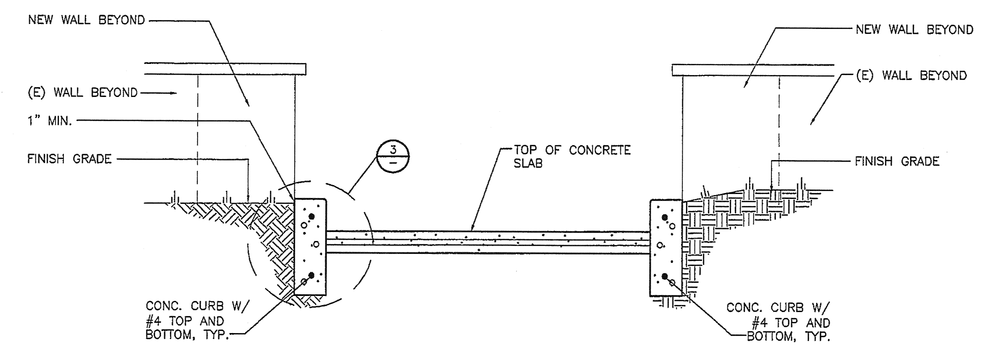


SECTION THRU WALK | 3/4"=1'-0" | 2

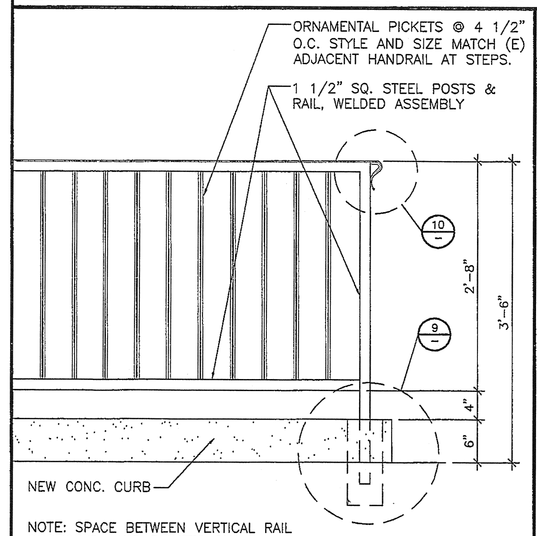


NOTE: SPACE BETWEEN VERTICAL RAIL SUPPORTS AND PICKETS SHALL NOT ALLOW FOR A 4"ø SPHERE TO PASS THROUGH.

ENLARGED RAIL ELEV. | 1"=1'-0" | 11

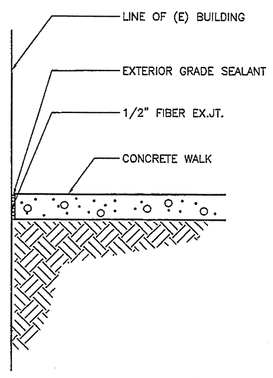


WALK @ (E) BUILDING | 1"=1'-0" | 7

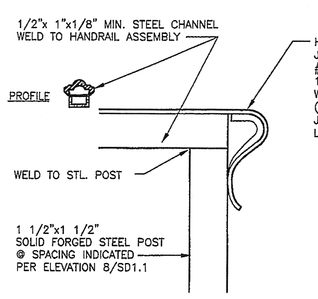


1. HANDRAIL AND POSTS TO BE PAINTED GLOSS, COLOR TO MATCH EXISTING

(A) DETAIL AT HANDRAIL TERMINATION

RAIL TRIM DETAIL | 3"=1'-0" | 10

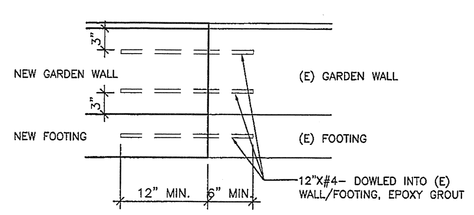


GARDEN WALL ELEV. | 1"=1'-0" | 6

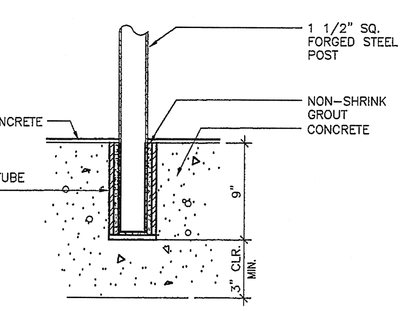


POST DETAIL | 1 1/2"=1'-0" | 9

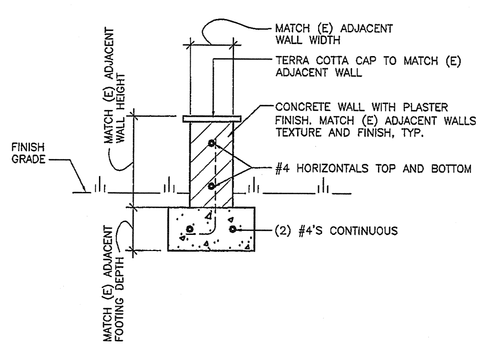


GARDEN WALL SECTION | 1"=1'-0" | 5

## CONSTRUCTION NOTES

1. NEW 4" THK. CONC. WALKWAY – "A SEEDED" EXPOSED AGGREGATE FINISH. MATCH SCRIPPS STANDARDS. PROVIDE EXPANSION AND CONTROL JOINTS AS INDICATED.
2. NEW CONC. CURBS
3. NEW GARDEN WALL PORTIONS MATCH EXSITING WALLS
4. NEW RAIL, ORNAMENTAL IRON PER DETAIL 8/–

## DEMOLITION NOTES

1. REMOVE PORTION OF EXISTING CONC. WALL. PROTECT IN PLACE (E) HANDRAIL.
2. REMOVE PORTION OF (E) GARDEN WALL. SALVAGE TERRA COTTA CAP FOR (N) WALL IN-FILL.
3. AT (E) PLANTERS – REMOVE (E) IRRIGATION LINES & SPRINKLER HEADS – CAP (E) LINES AT EDGE OF NEW WALL & CONC. CURBS.

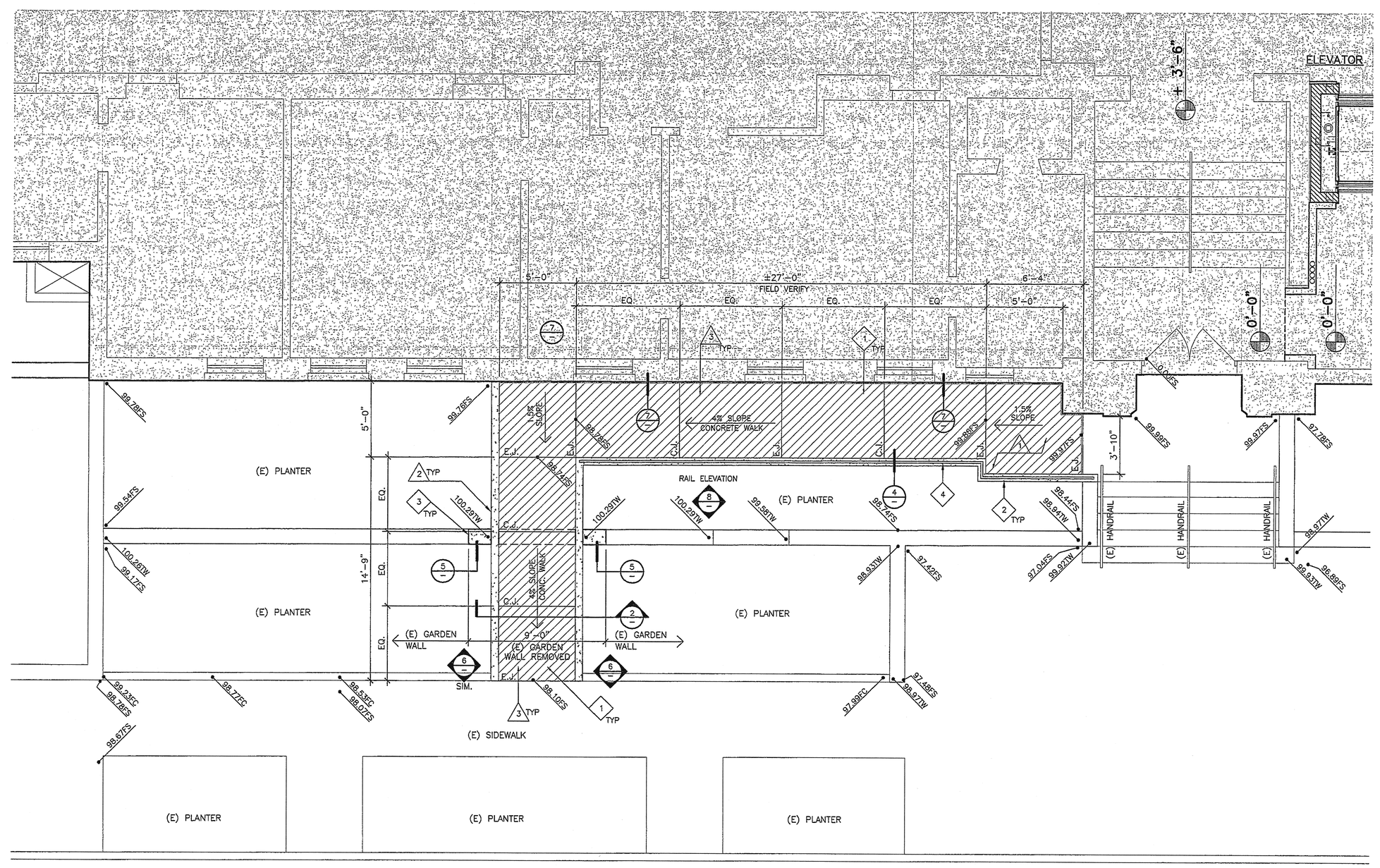


N

## NEW WALKWAY PLAN

1/4"=1'-0"

## PLAN LEGEND

AREA OF NEW CONCRETE WALKWAY

E.J. – EXPANSION JOINT

C.J. – CONTROL JOINT

SITE PLAN | 1/4"=1'-0" | 1


Brian R. Bloom Architect
350 S. Milliken Ave., Ste. G, Ontario, CA 91761-7850
(909) 390-7209 FAX: (909) 390-7509
ARCHITECTURE AND PLANNING


LICENSED ARCHITECT BRIAN R. BLOOM NO. C15944 6/31/07 STATE OF CALIFORNIA

CONSULTANT

SCRIPPS
THE WOMEN'S COLLEGE • CLAREMONT •

PROJECT
SCRIPPS COLLEGE
BALCH HALL
ELEVATOR AND RESTROOMS REMODEL

PROJECT LOCATION
1030 COLUMBIA AVENUE
CLAREMONT, CA 91711

ISSUANCES
02-21-07 PLAN CHECK SUBMITTAL
@ BID SET

REVISIONS

TITLE
NEW WALKWAY PLAN AND DETAILS


WEIDNER IRON
MAR 09 2007
RECEIVED


SCALE
AS NOTED
DATE
JANUARY 2006
JOB NO.
240906

SD1.1


H:\Projects\Scripps College\Balch Hall Elevator-Restrooms\Cont\Dwgs\BHR_SD1.1.dwg, 2/21/2007 10:30:51 AM, HP Designjet 650 C3 by HP.pc3